Antenna in Package

From an idea to volume production

Chris BARRATT
Insight SiP Sophia Antipolis FRANCE

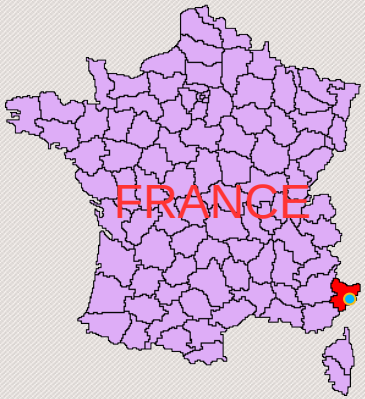

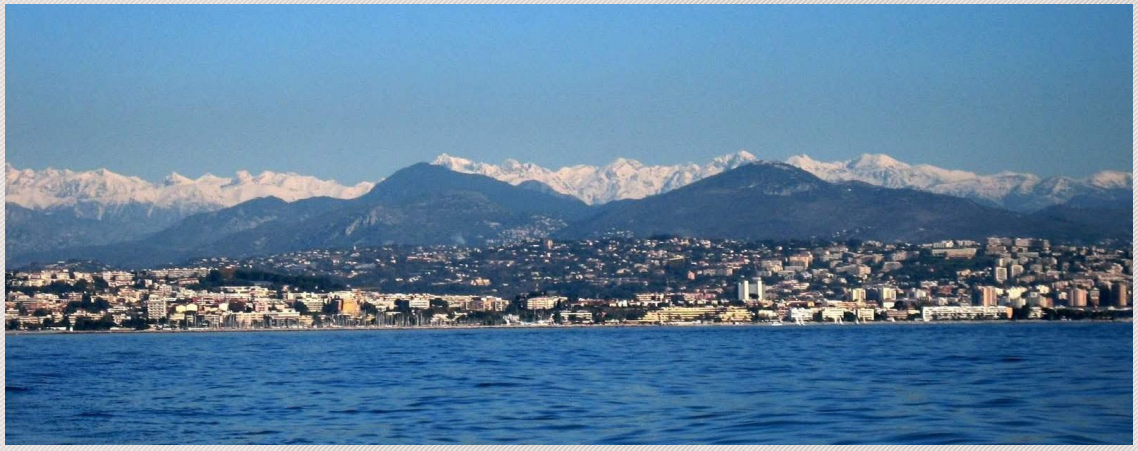

Agenda

- **Antenna in Package**
  - ✓ The origins
- **AiP Concept**
  - ✓ Definition
- **AiP Advantages**
  - ✓ Why to use it
- **The Design Process**
  - ✓ From an idea to a product
- **AiP Products**
  - ✓ Smart Bluetooth, UWB, Cellular
- **Other Integrated Antennas**
  - ✓ Hearing Aids
  - ✓ Watches
- **Conclusions**

"From an Idea to Volume Production"

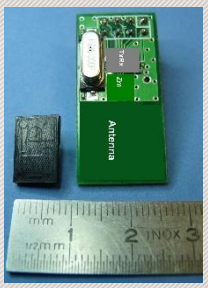

AiP Origins

- Insight SiP designed WiFi SiP modules for Nanoradio in 2005
- Par Bergsten (CEO and founder of Nanoradio)
  - ✓ "Why don't you integrate the antenna into the module too?"
- Insight SiP started R&D project on AiP with LEAT in 2005
- OSEO provided support from 2006
- Thesis by Mickaël Jeangeorges 2010
- First AiP product In 2008 (Wireless USB)
- First Smart Bluetooth AiP 2009
- Volume production ISP130301 in 2014

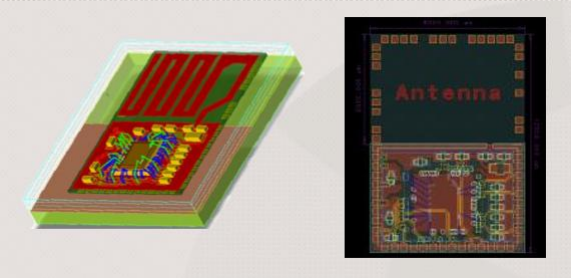

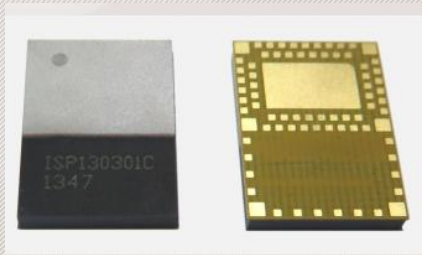

AiP Concept

- **First Integration level uses packaged parts on PCB**
  - ✓ SoCs in standard packages (BGA/QFN…)
  - ✓ SMTs as discretes
  - ✓ Flexible approach for initial prototypes and production
- **RF SiP – first level of miniaturization**
  - ✓ All the functionality in a single package (except antenna)
  - ✓ Much smaller footprint
  - ✓ Reduced RF complexity
- **AiP – Ultimate level of miniaturization**
  - ✓ Smallest footprint
  - ✓ Further reduced RF complexity

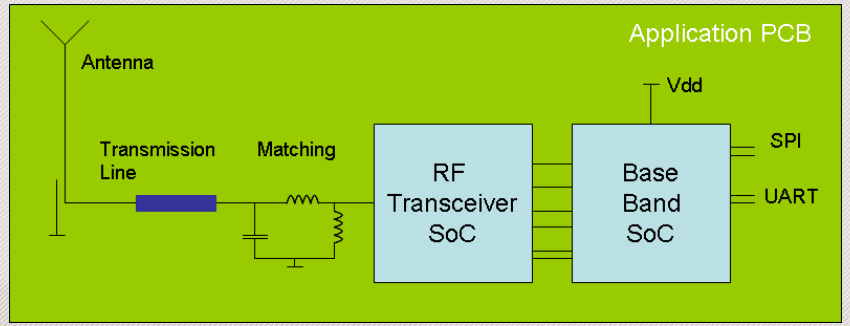

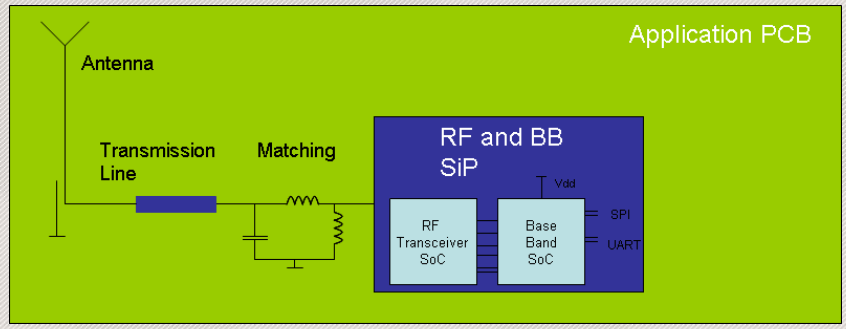

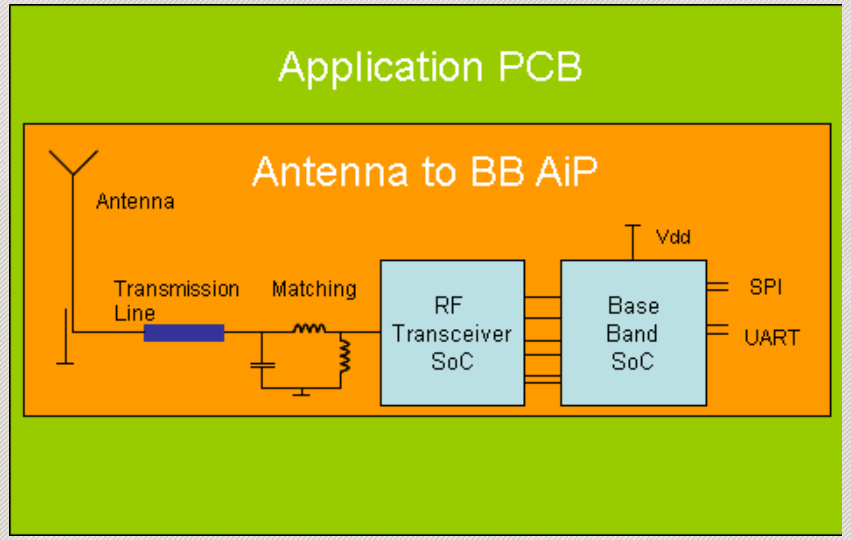

AiP Concept - Definition

- **Antenna in Package**
- **An antenna integrated inside a SiP**
  - ✓ Ideally using SiP technology
  - ✓ No need to add ceramic parts
- **Makes it easier to design systems**
  - ✓ "RF for Dummies"

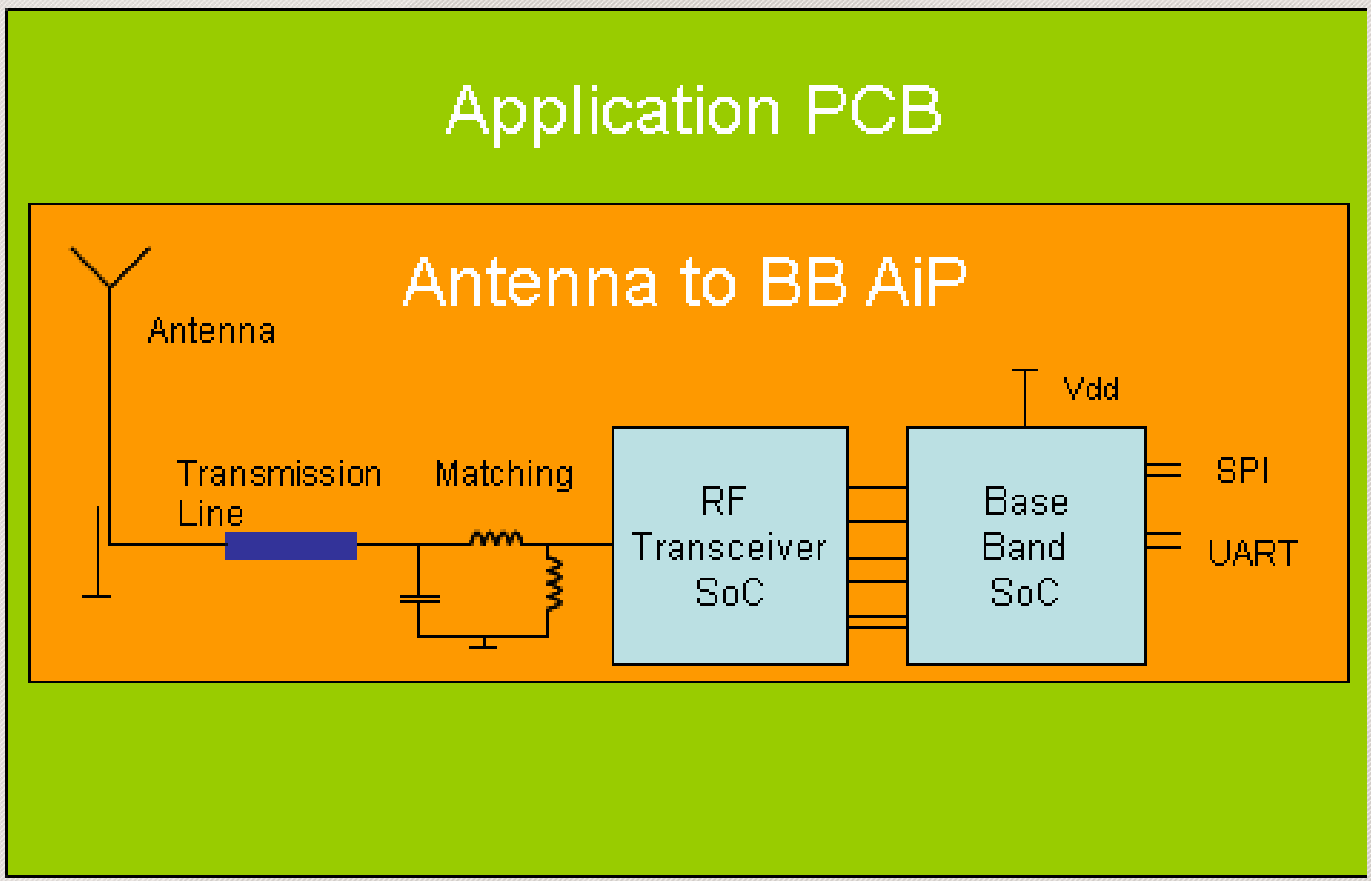

AiP Advantages

- **Design of complete system**
  - ✓ AiP removes need for antenna expertise at system level
  - ✓ AiP is smaller than SiP + antenna
- **Radio Certification**
  - ✓ Radio modules MUST have integrated antenna to be certified as modular transmitters (FCC).
  - ✓ Eliminates radio certification at system level
- **Time to Market**
  - ✓ AiP module works “out of the box”
  - ✓ Fewer design tweaks and spins

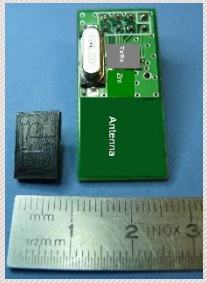

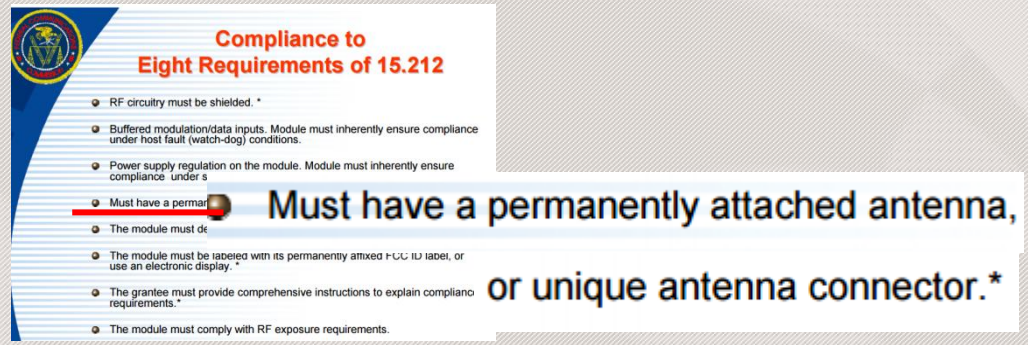

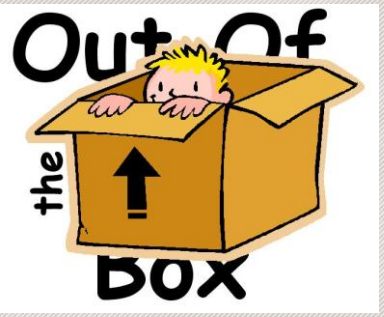

AiP Design Constraints

- **Miniaturization to fit in the package**
  - ✓ Size reduction of 2 to 3 times cf discrete antennas
- **Must use standard SiP technology**
  - ✓ LTCC or Organic substrates
  - ✓ IPD (silicon or glass based passive devices)
  - ✓ SMT components down to 01005
- **Performance Margins**
  - ✓ Multiple application platforms (ground plane size variations)
  - ✓ Standard SiP production tolerances
    - Dimensions
    - Material properties
- **Technical Specifications**
  - ✓ Return Loss over operating band
  - ✓ Radiation Efficiency over operating band
  - ✓ Radiation Patterns and Gain

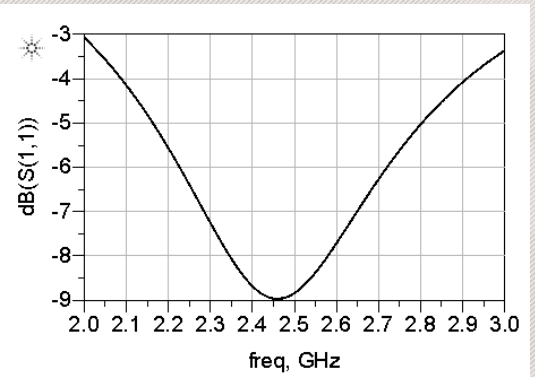

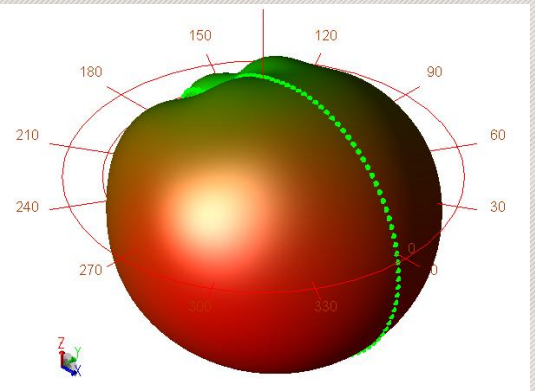

AiP Design Process

- **Starts from Knowledge Base**
  - ✓ Antenna experts
- **Batch EM sim**
  - ✓ Modeling
- **Final Antenna**
  - ✓ Fully EM simulated

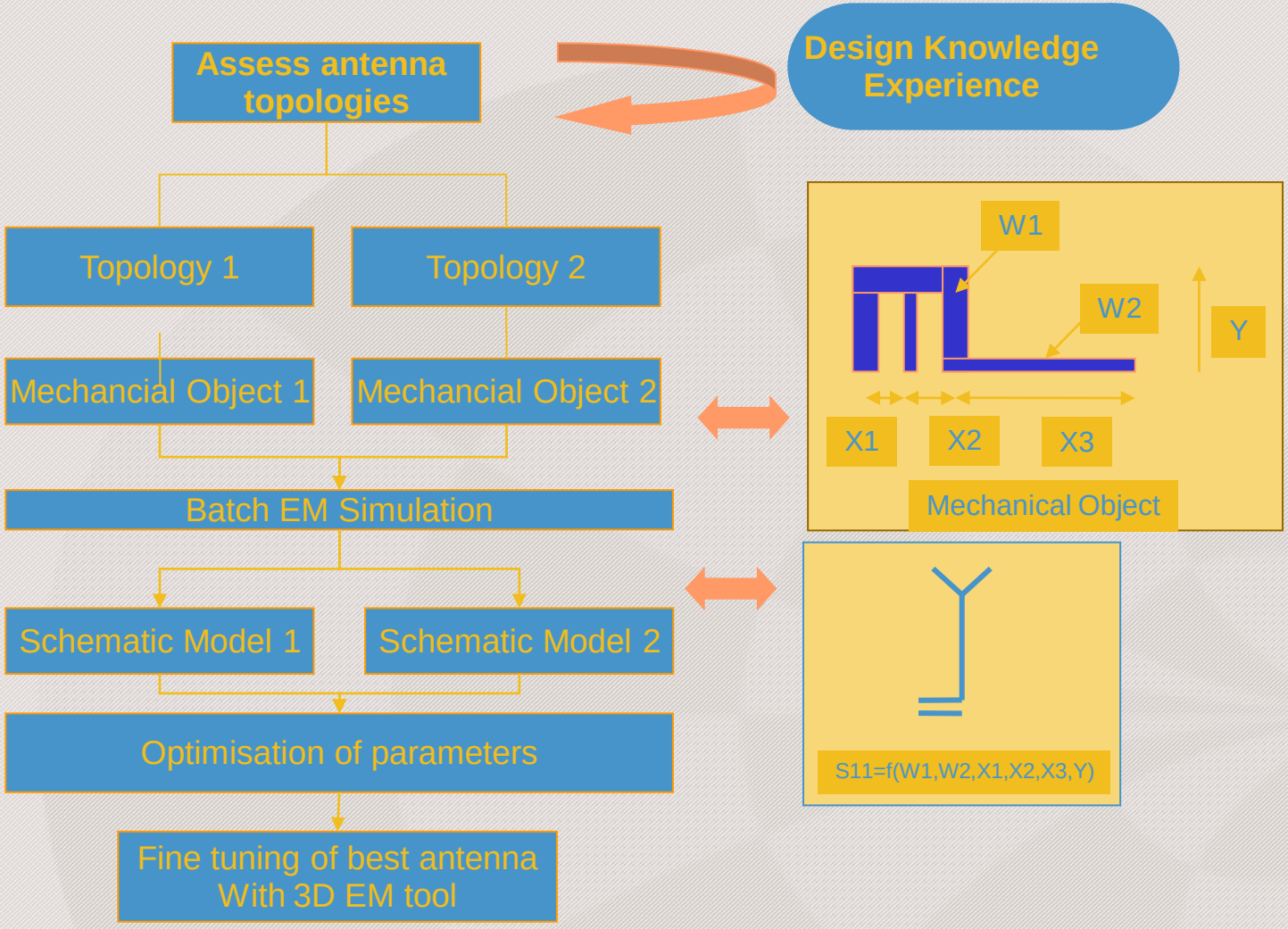

AiP Smart Bluetooth, UWB

- **AiP for Smart Bluetooth**
  - ✓ Based on Insight SIP patent EP2348578 A1 / US20120293392
  - ✓ Initial Implementation
    - ISP091201 Antenna size 8 x 6 mm
    - ISP130301 Antenna size 8 x 5 mm
  - ✓ Optimized implementations
    - ISP1302 Antenna size 8 x 3.5 mm
    - ISP1507 Antenna size 8 x 3.5 mm
    - 3rd party module 6 x 3.5 mm
  - ✓ Reduced size obtained with virtually no loss in radiation efficiency or matched band
- **AiP for Ultra Wide Band**
  - ✓ Based on patent WO2015018745 A1
  - ✓ Implementation 8 x 8 x 1.6 mm
  - ✓ Implementation UWB module ISP1510

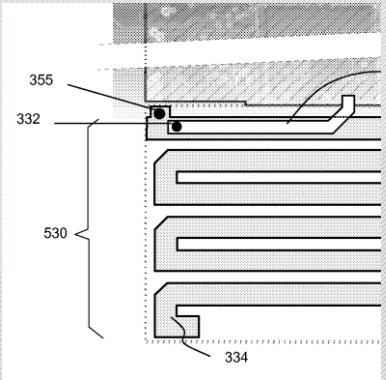

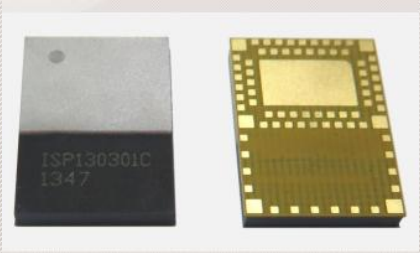

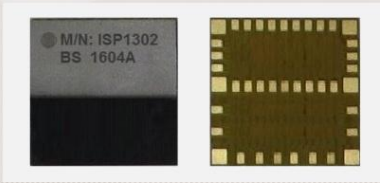

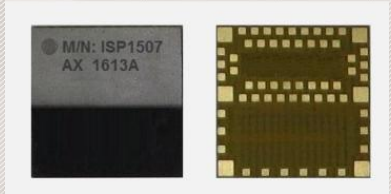

Reduced size

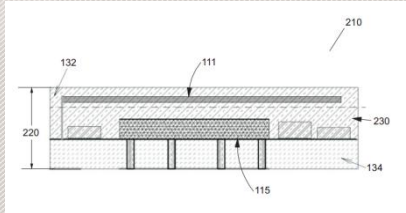

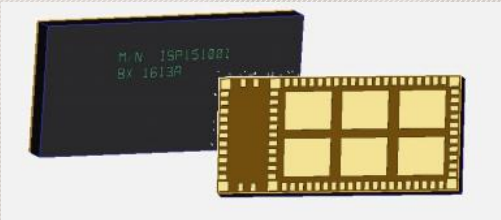

Smart Bluetooth AiP Performance

- **ISP130301 Module**
  - ✓ Radiation efficiency > 60%
  - ✓ 6dB Bandwidth > 250 MHz
  - ✓ Radiation Pattern
  - ✓ Range at 1m from ground > 70m with 0dBm output power

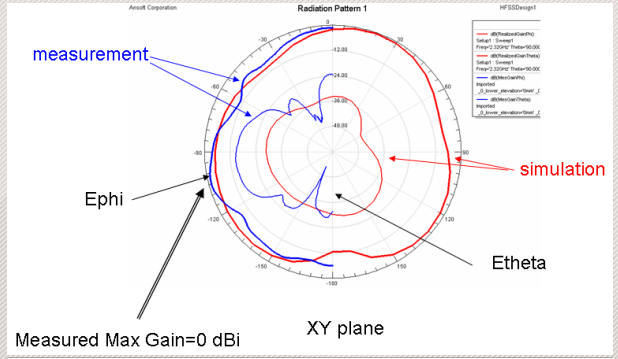

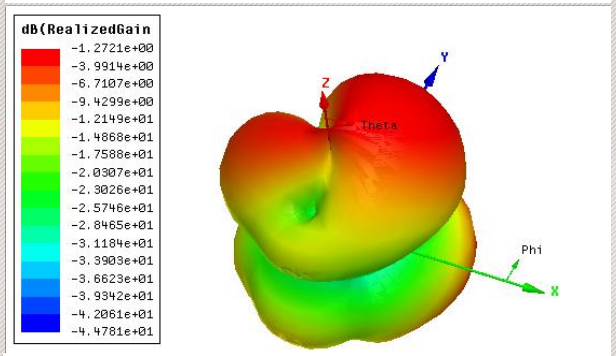

- **Etheta**

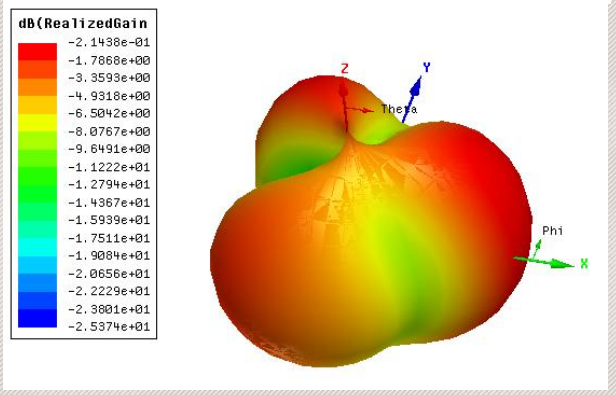

- **Ephi**

UWB AiP Performance

- **UWB AiP**
  - ✓ 8 x 8 x 1.6 mm
  - ✓ Radiation efficiency > 60%
  - ✓ 6dB Bandwidth 6.5 – 8.5 GHz
  - ✓ Operates over ground plane
  - ✓ “Patch like”

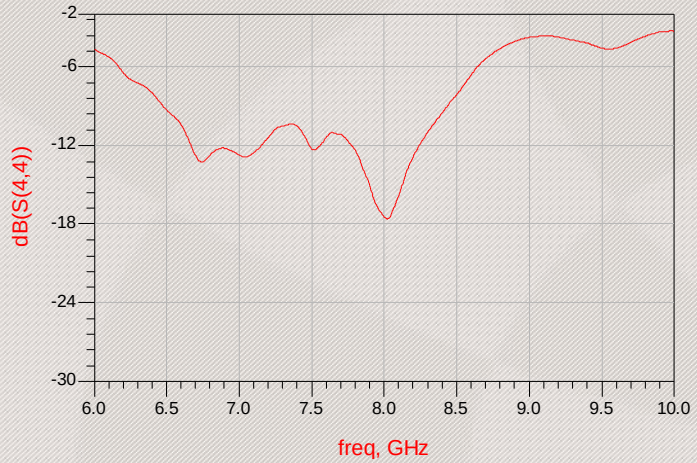

Custom Integrated Antennas

- Based on AiP designs
- Integrated specifically for custom use case
- Examples
  - ✓ Metal Watch

  - ✓ Hearing Aid

Custom Metal Watch

- **Stylised Metal Watch Case**
  - ✓ 28 to 35 mm diameter
  - ✓ Height 10mm
    - Reduced power consumption of individual functions <10mA radio
    - Electronics under movement
    - Antenna close to Electronics
    - Antenna near back plate

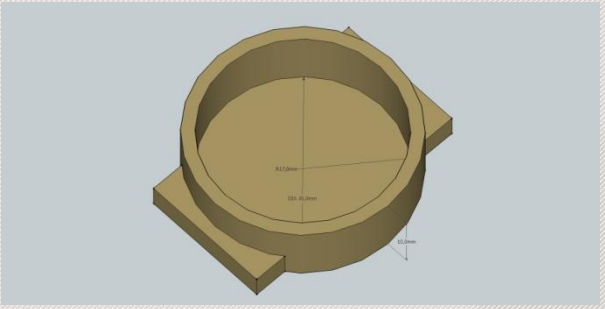

All Metal

Custom Antenna Design

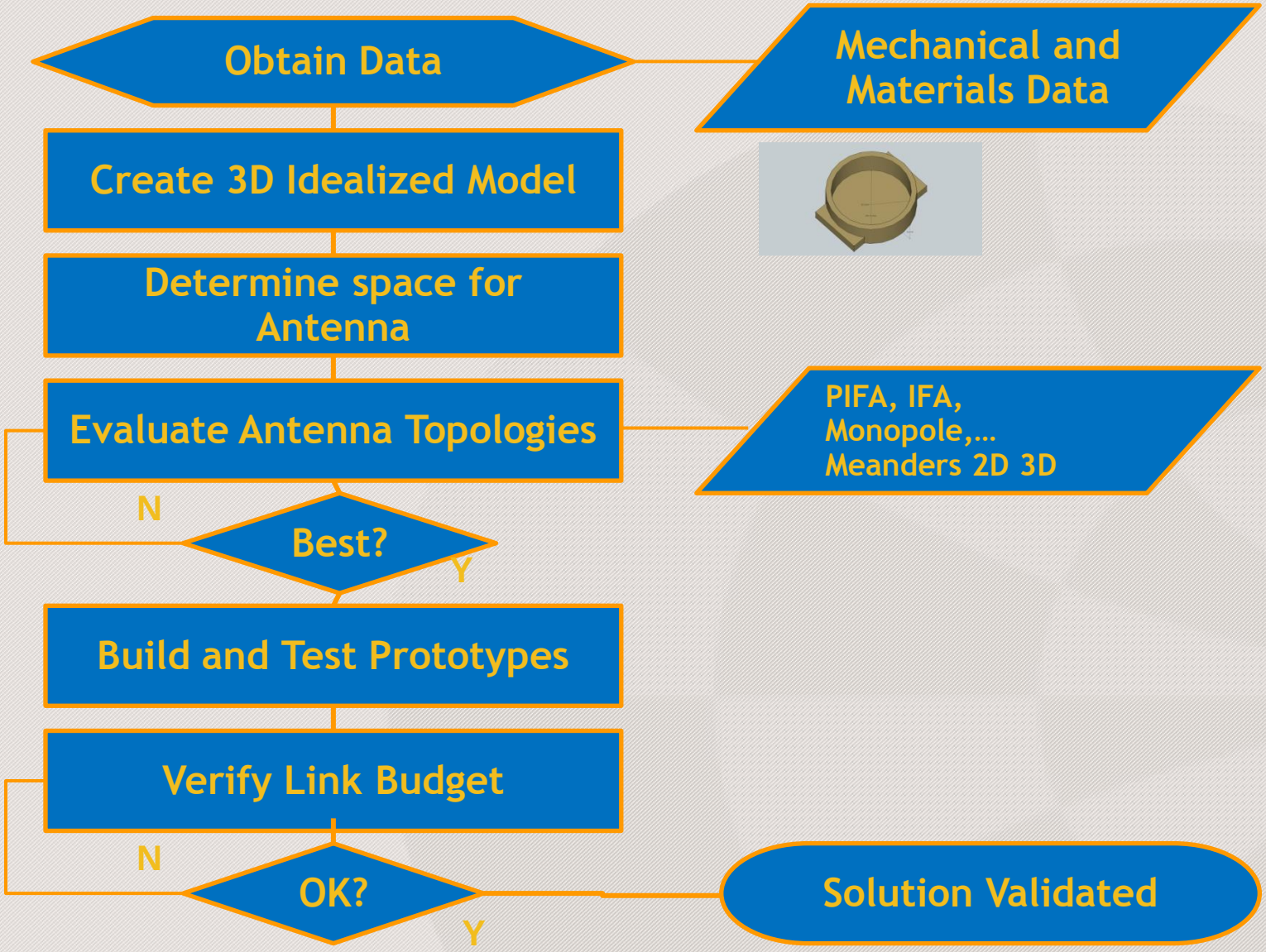

Antenna Example

- **Constraints**
  - ✓ Near watch back (2mm)
  - ✓ Small size (<30mm²)
  - ✓ Near watch side walls
- **Best Structure**
  - ✓ PIFA 3D type
- **Performance**
  - ✓ -9dBi gain

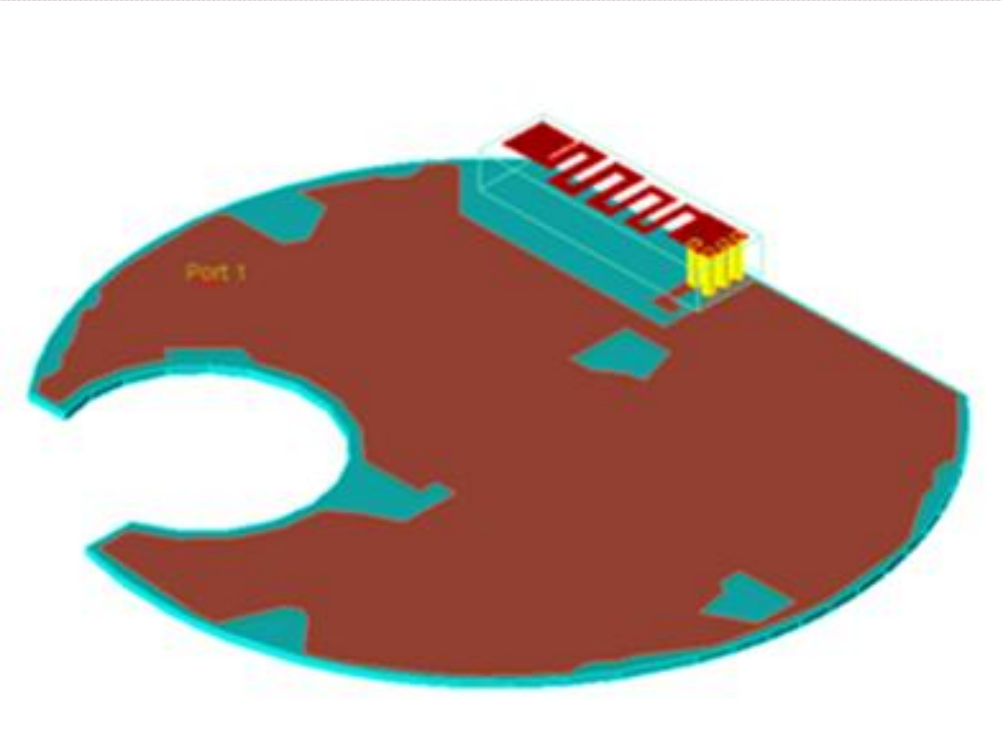

Link Budget

- **Parameters**
  - ✓ Pt – Transmit Power *0dBm*
  - ✓ Pr – Received signal at sensitivity level *-85dBm*
  - ✓ Gt – Transmit Antenna Gain *0dBi*
  - ✓ Gr Receive Antenna Gain *-9dBi (from measurements)*
  - ✓ S11 and S22 – *6dB Return Loss*
  - ✓ λ Wavelength – *122cm*
  - ✓ R Range

$$\frac{\mathrm{Pr}}{Pt} = GrGt(1 - S11^2)(1 - S22^2)\left(\frac{\lambda}{4\pi R}\right)^2$$

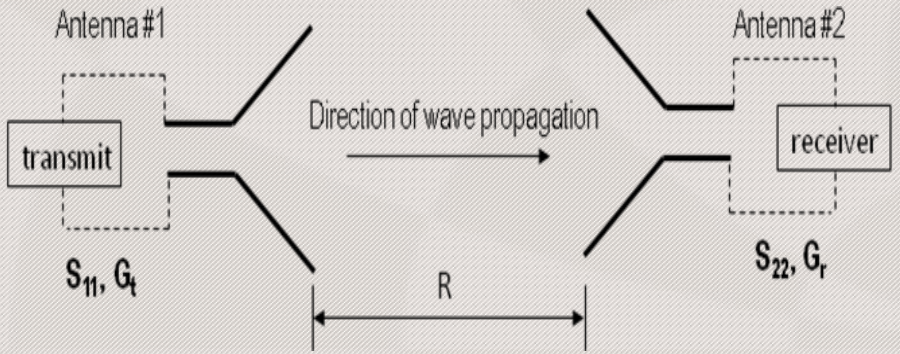

Estimated Range

- Despite relatively low gain
- Free space range > 40 m
- Close to ground range > 20m

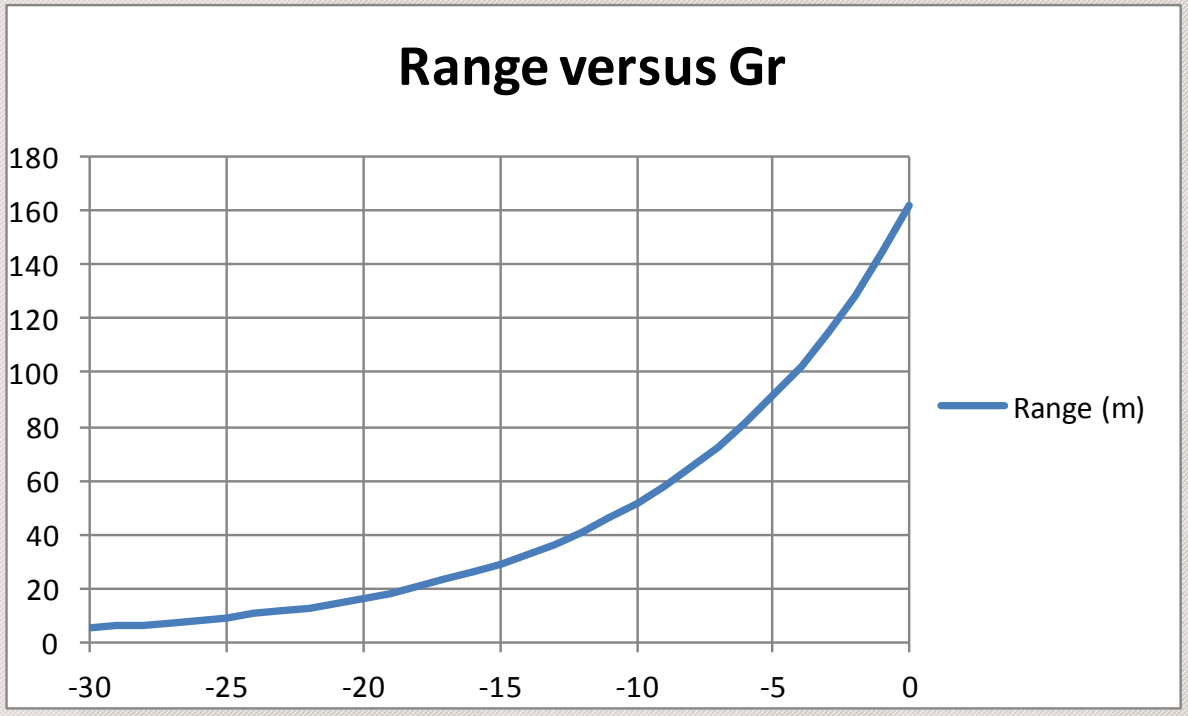

Hearing Aid

- **In-Ear Hearing Aid**
  - ✓ Tiny Form Factor
    - Battery
    - Microphone
    - Loud Speaker
    - Electronics
  - ✓ Bluetooth Smart
    - Add Antenna
    - It is inside the head
    - Must be very small
- **Major Challenges**
  - ✓ Antenna space is tiny
  - ✓ Antenna is surrounded by absorbing soft tissue

Freq (MHz)	ε'_r	ε''_r	σ (S/m)	ε_r	tg δ
2450	52.7	14.3	1.9	54	0.27

Hearing Aid EM Modeling

- **Head Model**
  - ✓ Octagonal Prism
  - ✓ Filled with dielectric
  - ✓ Small Air Cavity = Ear
- **Return Loss > 6dB in band**
- **Total Gain > -16 dBi in band**

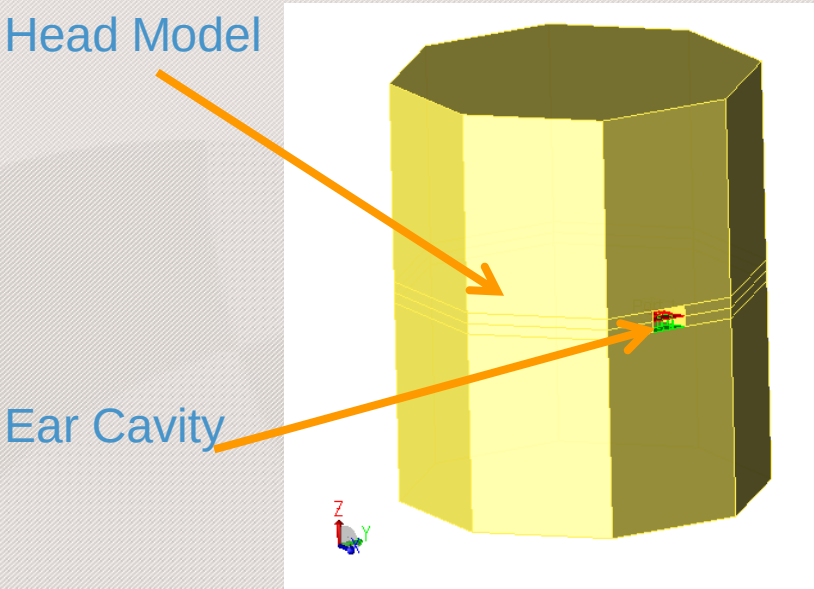

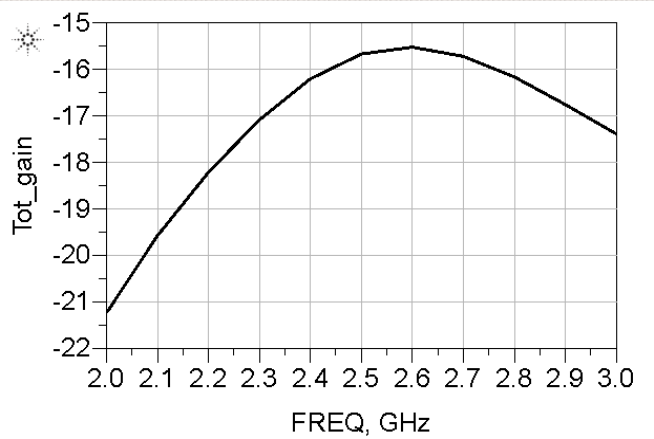

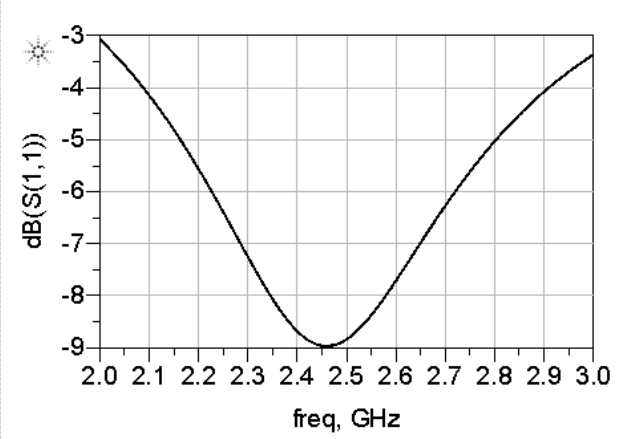

Hearing Aid Performance

- Gain -16dBi towards outside
- Gain -35 dBi in worst case position “through the head”

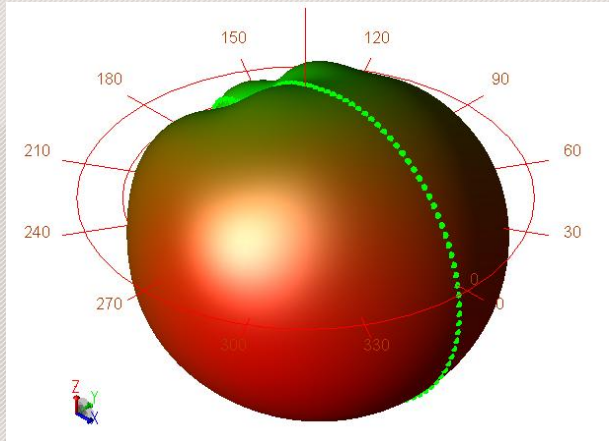

Max. gain (dBi)	Max. free space range R_{max} (m)	Multipath error correction $\alpha = 0.6\ R_{max}$ (m)
-16	25	15

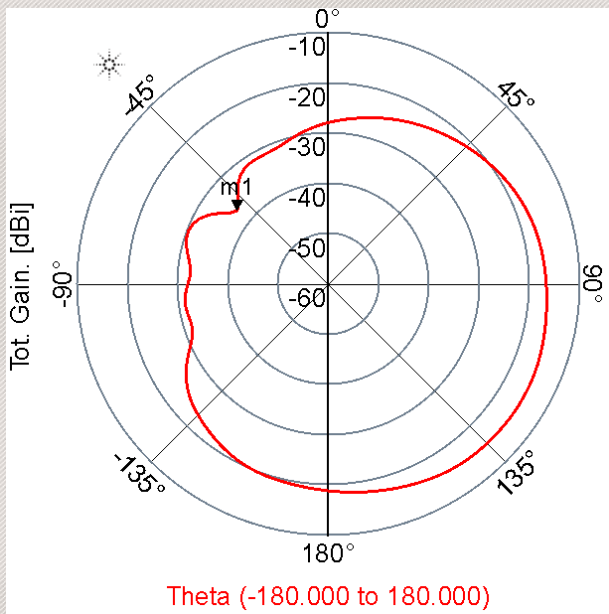

Conclusions

- AiP allows for smallest in class solutions
- AiP reduces dependency on RF expertise
- AiP accelerates time to market
- Custom antennas use AiP miniaturization techniques to resolve difficult system issues
- Insight SiP has volume production for its AiP products today

Thank you


thank you
danke
謝謝
ngiyabonga
teşekkür ederim
gracias
tapadh leat
спасибо
Баярлалаа
рахмат
dank je
mochchakkeram
go raibh maith agat
dziękuję
bedankt
obrigado
sukriya
kop khun krap
arigatô
dakujem
merci
grazie
terima kasih
감사합니다
ありがとう
merci
ευχαριστώ
хвала
мерси
mauruuru
hvala
sagolun
taiku
takk
chnorakaloutioun
gratias ago
gràcies
djiere dieuf
дякую
mamnun
obrigada
asante
manana
enkosi
sobodi
dëkuji
mèsi
najis tuke
kam sah hamnida
তোমাকে ধন্যবাদ
xièxie
diolch
dhanyavadagalu
shukriya
merci
trugarez
chokrane
murakoze
tenki
köszönöm
kiitos
dankie
dhanyavad
faafetai lava
vinaka
спасибі
blagodaram
misaotra
matondo
paldies
grazzi
mahalo
welalin
tack
barka
mersi
kia ora
spas
akun
dankon
aciû
sulpáy
tau
nanni
nandri
bayarlalaa
gràcie


ANY
questions?