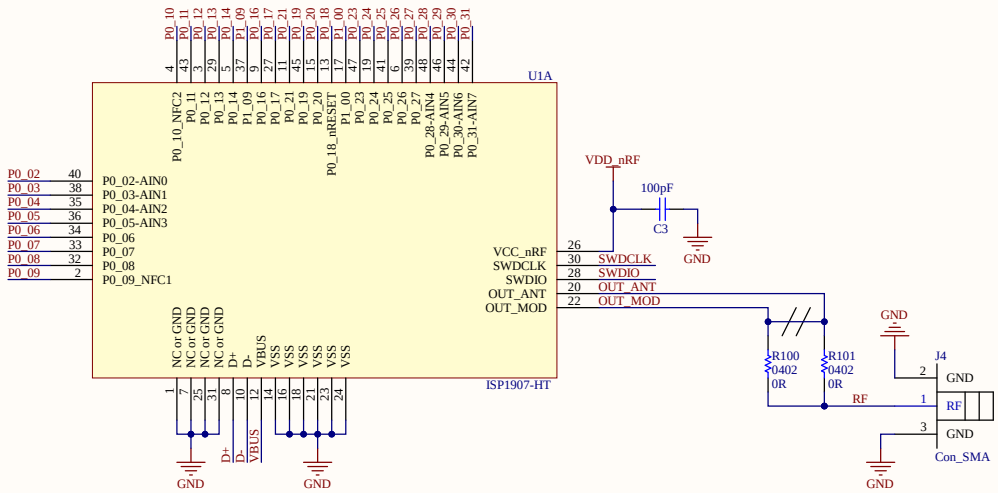

Interface Board connector

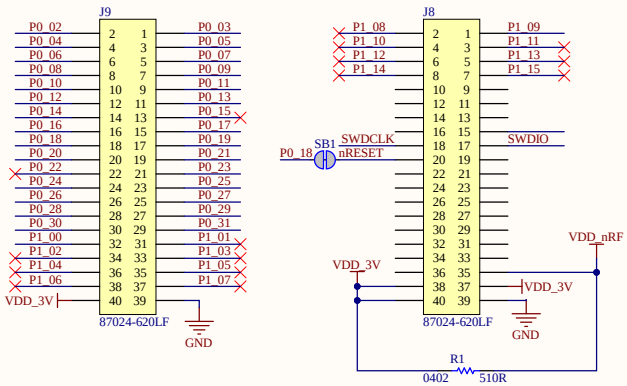

Power supply configuration:
35: Sense (-) for current measurment
37: Sense (+) for current measurment
38: Power Input from the IB
40: Power supply for Ext connector on IB

External Supply and Debugger

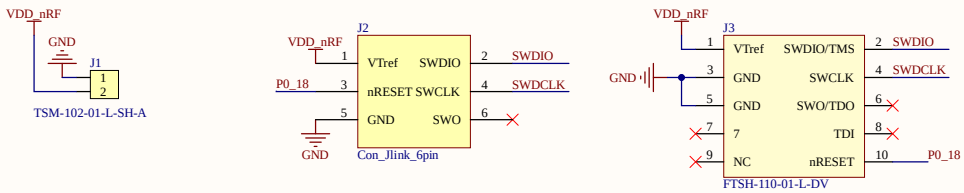

Breakout connectors

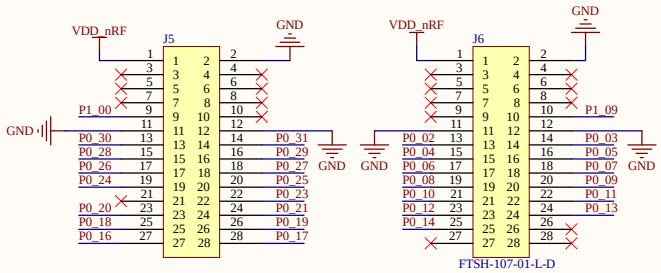

NFC Antenna

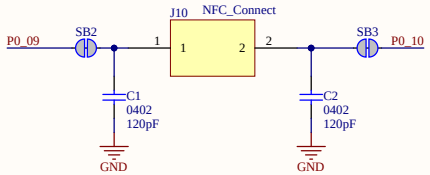

USB

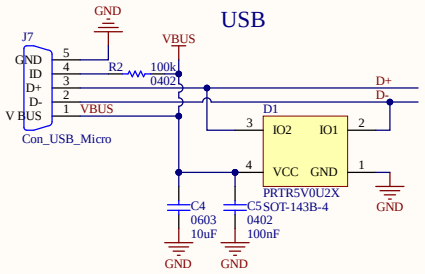

Title	ISP1907-HT Test Board		Insight SIP 400 avenue Roumanille Sophia ANtipolis 06906 France
Size: A3	Number: ISP1907-HT	Revision: B	
Date: 08/11/2023	Time: 16:08:24	Sheet 1 of 1	
File: C:\Workspace\Projects\ISP1907\2-Design\ISP1907-HT-TB_RevB (01.03.2023 10-36-48)\ISP1907HT-TB_RevB.SchDoc			