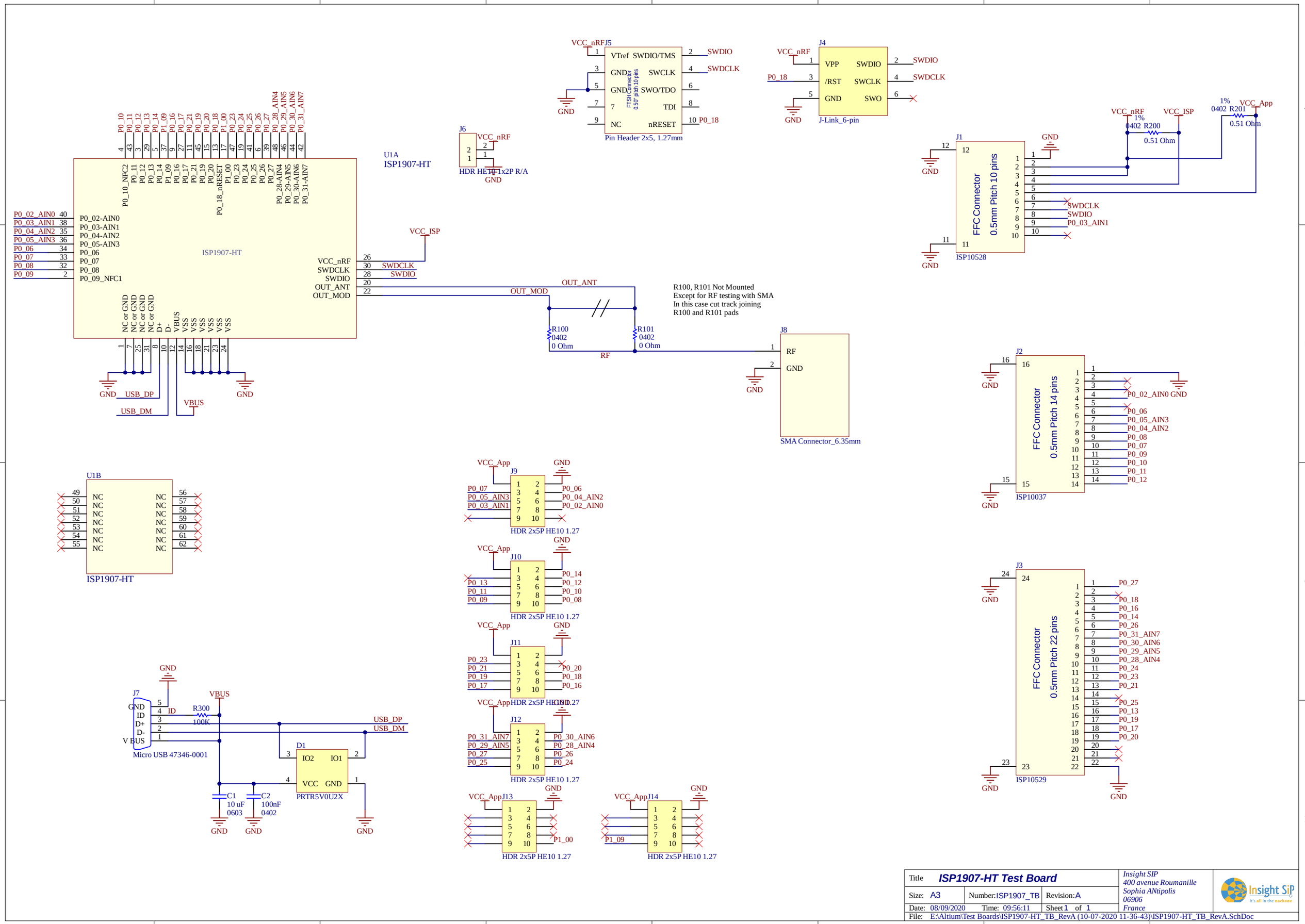

Title	ISP1907-HT Test Board		Insight SIP 400 avenue Roumanille Sophia ANtipolis 06906 France
Size: A3	Number: ISP1907_TB	Revision: A	
Date: 08/09/2020	Time: 09:56:11	Sheet 1 of 1	
File: E:\Altium\Test Boards\ISP1907-HT_TB_RevA (10-07-2020 11-36-43)\ISP1907-HT_TB_RevA.SchDoc			